Host Utilities

TATA POWER
TATA POWER-DDL Towards a Greener Tomorrow
BSES BSES Rajdhani Power Limited
BSES BSES Yamuna Power Limited
NPCL NOIDA POWER COMPANY LIMITED

Knowledge Partner

Power Foundation of India

SESSION PARTNER

ORACLE

ORGANIZER

ISGF India Smart Grid Forum

India SMART UTILITY Week 2026

10 – 14 March 2026, New Delhi

Supporting Ministries

MINISTRY OF POWER GOVERNMENT OF INDIA
NITI Aayog
MINISTRY OF POWER GOVERNMENT OF INDIA CENTRAL ELECTRICITY AUTHORITY
DEPARTMENT OF SCIENCE & TECHNOLOGY
AIDA Collaboration | Innovation | Excellence

Session : Square-Mile Size AI Data Centre Requiring GW-Scale Power Connections

Overcoming Datacenter power demand fears via flexiblity

Presented By

Matt Gleeson, VP Energy Transition, Oracle

Data centres are becoming a system-critical electricity load

- Hyperscale DCs are typically 50–500 MW per site—comparable to a city-sized load at a single connection point
- AI-era campuses are moving into GW-scale single-site demand (global trend)
- Utilities face a timing mismatch: DC connection demand arrives in ~12–18 months while grid reinforcement can take years

- **Result:** Capacity/congestion/voltage constraints and increased operational risk unless DCs become active participants.

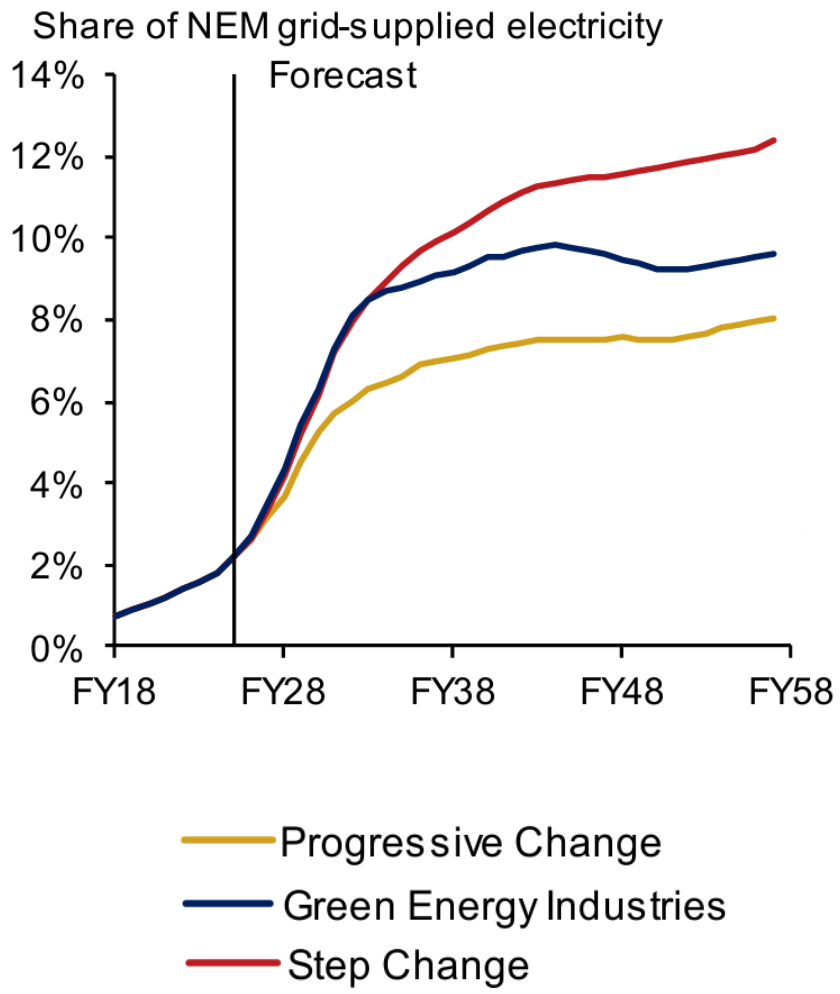

Confidential - Oracle Restricted \Employees Only

DC Load is not flat anymore

- Traditional enterprise workloads can be relatively schedulable/migratable.
- AI training is bursty and can often be checkpointed/rescheduled (potential flexibility).
- AI inference is latency-sensitive (least flexible on compute, but still has power/thermal flexibility).
- Variability can cause step changes and ramps that utilities don't see in legacy industrial loads.

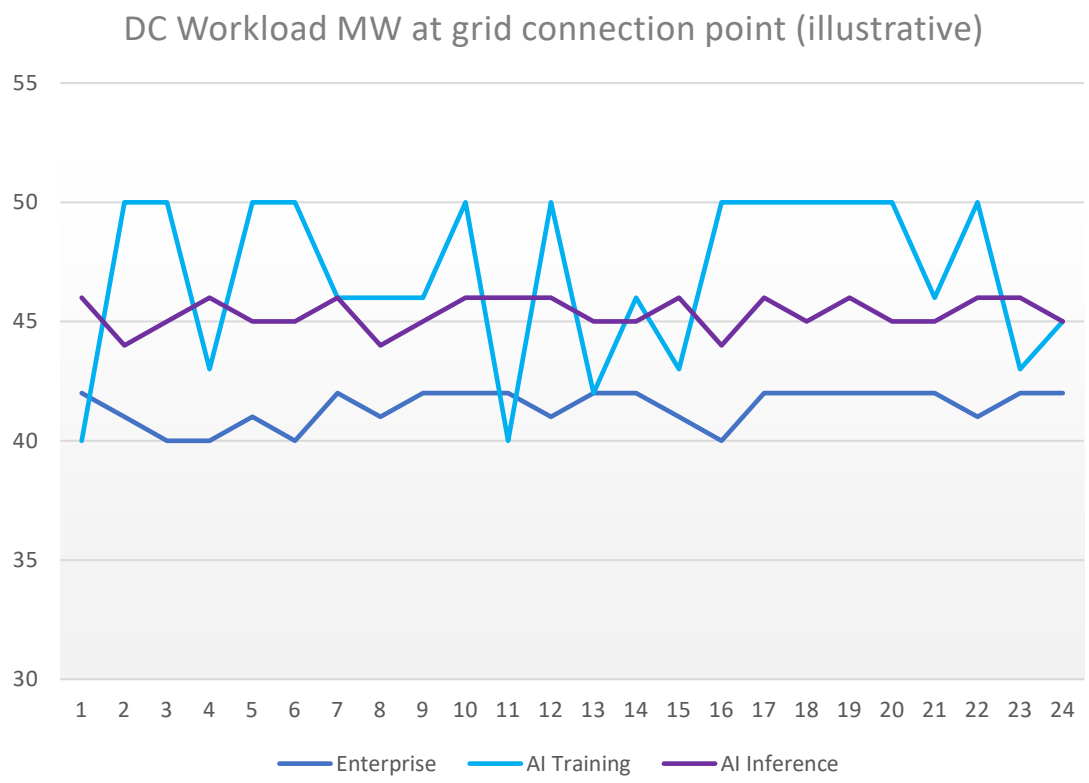

Confidential - Oracle Restricted \Employees Only

DC flexibility is real—but requires a grid-aware orchestration model

- Suggested approach:
  - Grid DERMS treats the DC as a dispatchable resource at its connection point and performs network constraint analysis (power flow/state estimation + headroom) rather than event-only dispatch
  - Utility requests outcomes/constraints; DC executes internally—operator retains control

Grid Service	DC Delivery Mechanism	Response	Grid DERMS Function
Peak management	BESS discharge, cooling thermal mass, training job checkpointing (inference limited)	5–15 min	Peak shaving, NCA, cost-optimised dispatch
Voltage support	Reactive power from inverters, BESS, PFC	Real-time (RT)	DMS/DERMS coordination with VVO
Congestion management	Load curtailment via BESS/cooling, training job rescheduling, workload migration (enterprise/training only)	15 min	NCA + OPF, DOE dynamic limits
Energy arbitrage	BESS charge/discharge on price signals	Day-ahead (DA)	Economic dispatch, contractual rules
Dynamic export	BESS and on-site generation export to grid	DA / RT	DOE dynamic export limits, FERC 2222
Market participation	Availability schedules and bids	Day-ahead	DOE with submitted availability

Dynamic Operating Envelopes (DOE): Success Models

- DOE provides dynamic import/export limits (day-ahead window) to replace static connection agreement limits
- Combined with Network Capacity Allocation (NCA) and Optimal Power Flow (OPF) for schedules that respect thermal/voltage constraints and commercial rules

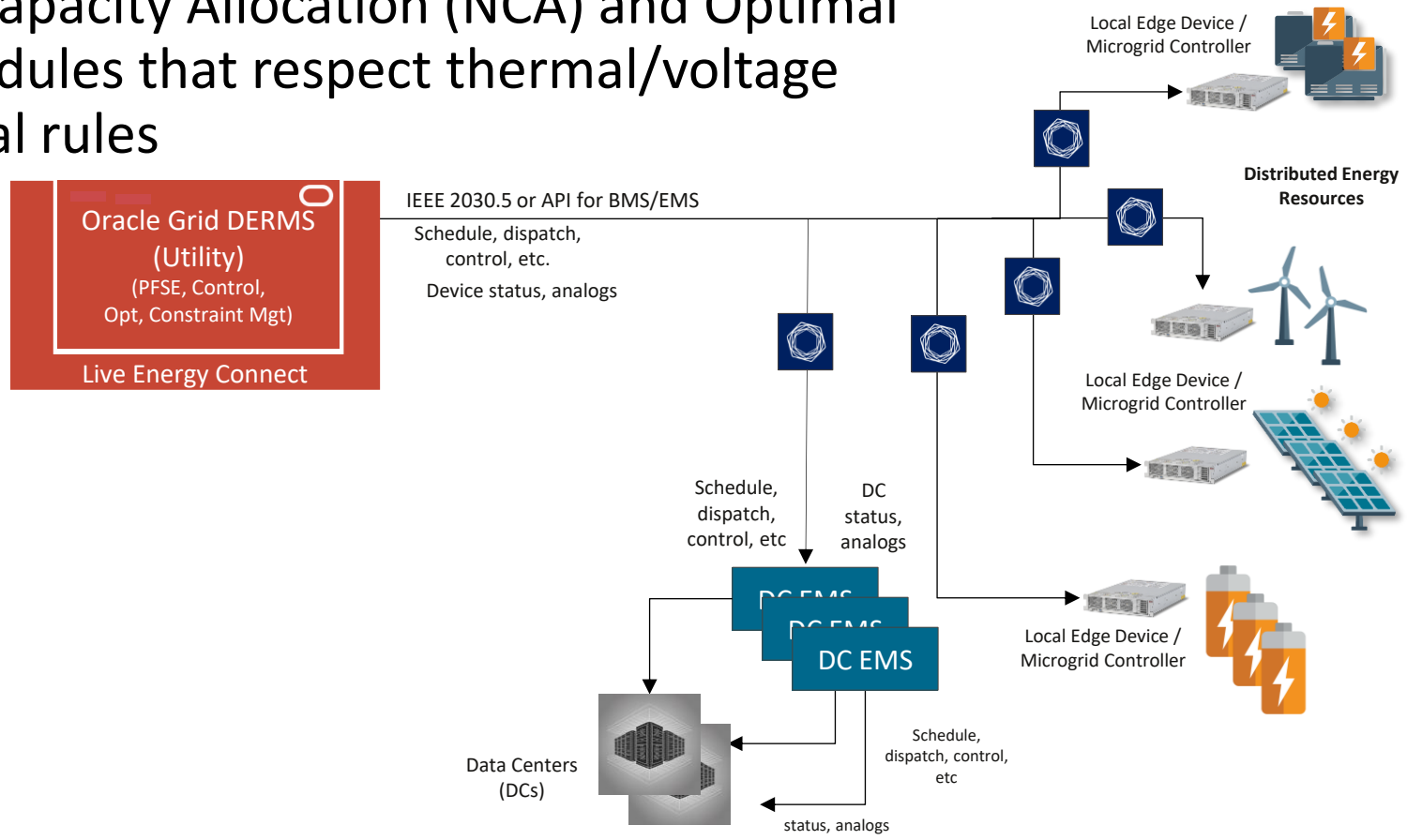

Start with a pragmatic approach

- For DC flexibility, utilities can scope the model to DC connection points + upstream network (faster time-to-value than full distribution topology builds)
- Measure outcomes: MW curtailed on constraint, voltage excursions avoided, congestion hours reduced, compliance vs envelope, connection lead time improvement.

Confidential - Oracle Restricted \Employees Only

Host Utilities

TATA POWER

TATA POWER-DDL
Towards a Greener Tomorrow

BSES
BSES Rajdhani Power Limited

BSES
BSES Yamuna Power Limited

NPCL
NOIDA POWER COMPANY LIMITED

Knowledge Partner

Power Foundation of India

SESSION PARTNER

ORACLE

ORGANIZER

ISGF
India Smart Grid Forum

India SMART UTILITY Week 2026

10 – 14 March 2026, New Delhi

Supporting Ministries

MINISTRY OF POWER
GOVERNMENT OF INDIA

NITI Aayog

MINISTRY OF POWER
GOVERNMENT OF INDIA
CENTRAL ELECTRICITY AUTHORITY

DEPARTMENT OF
SCIENCE & TECHNOLOGY

AIDA
Collaboration | Innovation | Excellence

THANK YOU

For discussions/suggestions/queries email: isuw@isuw.in

www.isuw.in

Matthew.gleeson@oracle.com